FlySpark TB80KG+ Small Turbojet Engine

Table of Contents

Notes and Precautions 1
1.1 Limited Warranty 1
1.2 Safety Instructions 1
1.3 Additional Safety Notes 2
Engine System 2
2.1 Fuel System 2
2.2 Starting System 2
2.3 Control System 2
2.4 Temperature Sensor Parameters 3
Engine Technical Specifications 3
3.1 Engine Outline Dimensions 3
3.2 Engine Technical Parameters 4
Engine Operation and Maintenance 6
4.1 Engine Testing 6
4.2 Engine Storage 8

Thank you for purchasing the 80 kg-class turbojet engine. The turbojet operates under extremely severe mechanical conditions and carries inherent hazards. Operators must fully master operational procedures and understand associated risks prior to use. Improper operation may result in engine damage and personal injury. Please read this manual thoroughly and comply with all operating requirements.

If you are operating a turbojet engine for the first time, perform all operations under the supervision of experienced personnel. Study this technical specification carefully before initial engine start-up.

1. Notes and Precautions

1.1 Limited Warranty

Service life of this turbojet engine is directly affected by operating environment and operator technique. This engine adopts a minimal-structure design to sustain extreme operating conditions. All components are engineered for rigorous service environments. Do not disassemble the engine by yourself.

Original purchasers are covered against non-induced natural failures for 1 calendar year or 25 cumulative operating hours, whichever occurs first. Contact the technical department for operational questions or troubleshooting.

1.2 Safety Instructions

Safety clearances: The turbojet runs at extremely high rotational speeds. Maintain minimum clearances: 5 m forward, 5 m lateral, and 15 m rearward from the engine.

Have a CO_2 carbon-dioxide fire extinguisher ready before starting. Dry-powder fire extinguishers are strictly prohibited.

High-thrust operation generates noise exceeding 130 dB. Wear hearing-protection headsets to prevent hearing impairment.

1.3 Additional Safety Notes

While the engine is running, keep all objects at least 1 m away from the air intake. Keep the inlet duct clean, and securely fasten surrounding equipment.

Maximum exhaust gas temperature can reach 820 ° C during operation. Implement adequate thermal insulation when installing the engine.

Do not start this engine indoors.

2. Engine System

2.1 Fuel System

Fuel: RP- 3 aviation kerosene.

Lubricant: Mobil Pegasus II lubricant is recommended, blended into fuel at 5 % volume ratio. If mixed fuel is stored for extended periods, agitate thoroughly before use.

Fuel Pump: This unit is equipped with a metering fuel pump. See the corresponding table for pump characteristics.

Figure 1 Fuel Pump Outline Drawing

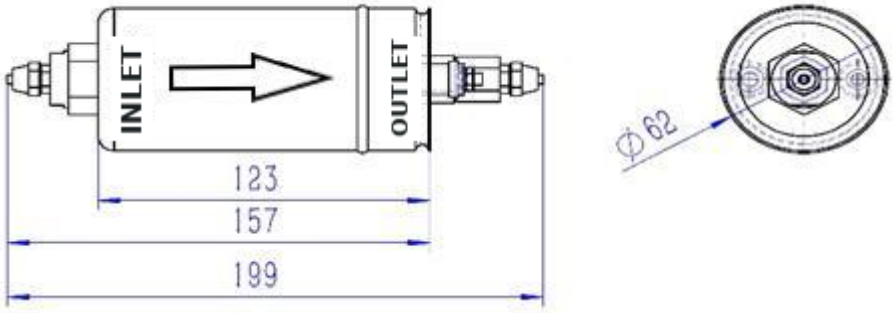

2.2 Starting System

One- touch start; compressed- air or fuel- assisted start options available.

2.3 Control System

The control system of the 80 kg engine consists of fuel- control ECU, actuator TCU, temperature sensors, speed sensors, connecting cables, fuel pumps, solenoid valves and batteries.

The ECU features stepless adjustment. Within the flight envelope, it ensures engine acceleration, deceleration as well as transition and regulation across all operating modes. It is capable of acquiring and processing signals of rotational speed n and exhaust gas temperature T5, and supports RS232 communication. Together with the starting mechanism, it implements motoring and dry cranking. It provides emergency shutdown, over- current and overload protection, as well as built- in ground self- test functions. The self- test covers the ignition fuel solenoid valve, main fuel supply solenoid valve, starter motor, fuel pump and igniter.

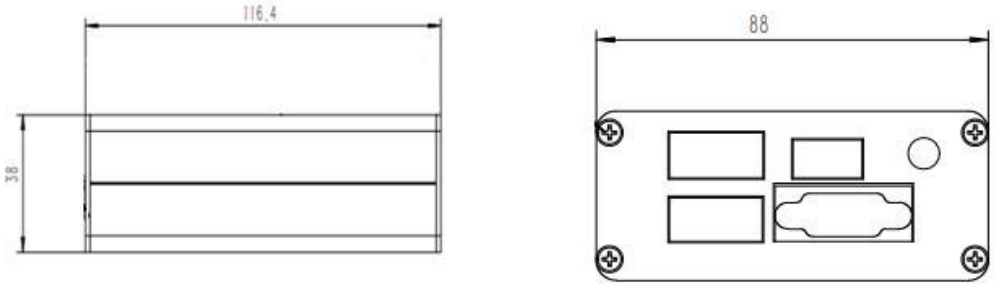

2.4 Temperature Sensor Parameters

Temperature sensing for exhaust gas temperature monitoring, operating range - 40 ° C ~ +850 ° C.

3.1 Engine Outline Dimensions (tolerance ±2 %)

Figure 4 Engine Outline Drawing

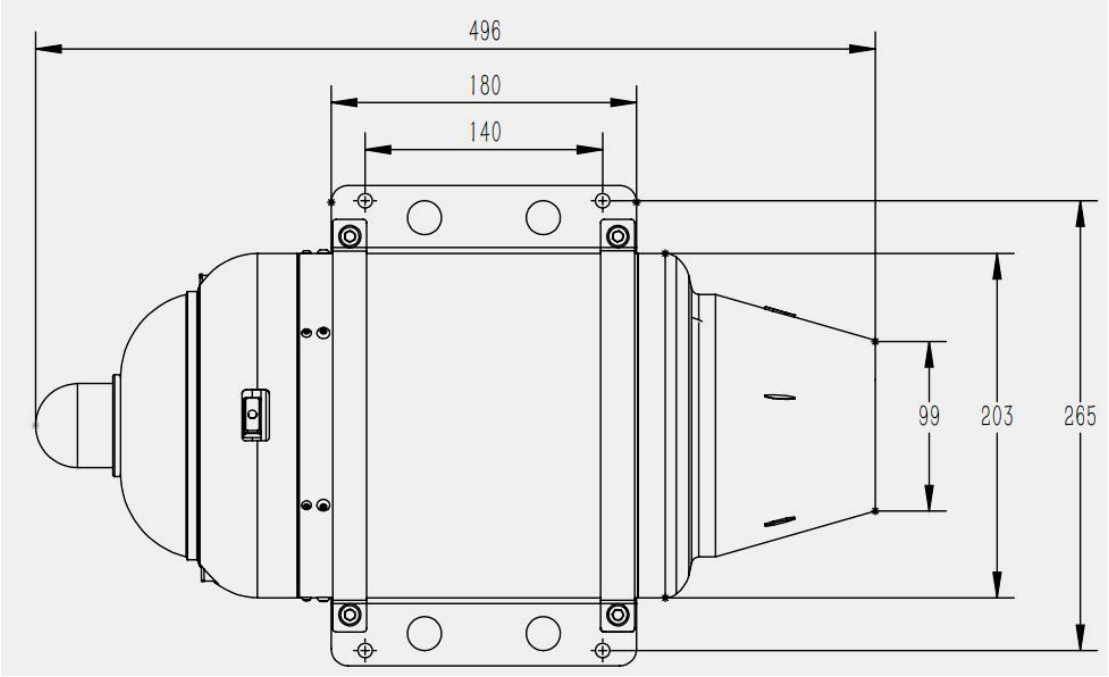

Figure 5 Physical Engine Outline Diagram

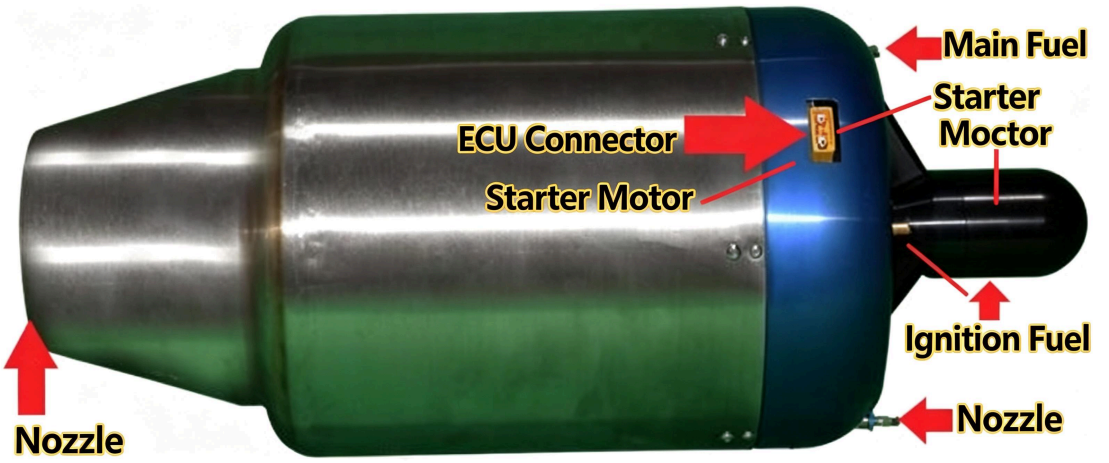

3.2 Engine Technical Parameters

Reference standard atmospheric conditions: ambient temperature ≤15 ° C, relative humidity ≤50 %, good air quality, barometric pressure ≥1013 hPa

Parameter	Value
Continuous rotational speed	60 000 r/min
Continuous thrust	70 kg ±2 %
Idle rotational speed	30 000 r/min
Idle thrust	9.5 kg ±2 %
Maximum outer diameter	202 mm
Maximum overall length	503 mm
Dry engine weight	9.5 kg
Installed weight	12 kg
Air mass flow	1.8 kg/s
Fuel consumption at maximum thrust	2.0 kg/min ±2 %
Maximum exhaust gas temperature	820 ° C
Ambient operating temperature range	- 40 ° C ~ +50 ° C
Fuel type	Aviation kerosene
Lubrication requirement	Mobil Pegasus II, 5 % blend ratio
Power supply battery	4C lithium- ion battery
Maximum allowable starting altitude	4 500 m ±10 %
Maximum allowable operational altitude	10 000 m
Maximum allowable flight velocity	300 m/s
Maximum longitudinal overload	6 G

Parameter	Value
Starting mode	One- touch start; fuel / air start optional
Maintenance interval	25 operating hours

Table 3 Engine Performance Specifications

Figure 11 Engine Packaging Illustration



Packing List — Table 4 Engine Packing List

No.	Item	Unit	Specification	Qty.
1	Turbojet Engine	Unit		1
2	Engine ECU with Wiring Harness	Set		1
3	Fuel Pump	Piece		1
4	Engine Mounting Clamp Assembly	Set		1
5	Engine Inlet Protection Screen	Piece		1
6	Test USB- to- RS232 Adapter	Set		1
7	Main Fuel Solenoid Valve	Piece		1
8	Ignition Fuel Solenoid Valve	Piece		1

No.	Item	Unit	Specification	Qty.
9	Spare Fuel Tubing Kit	Set		1
10	80kg Engine Certificate of Conformity	Document		1

4.1 Engine Testing

(1) Pre- test Preparation

Connect ECU- solenoid cables, fuel- pump cables, engine harness, DB9 communication cable and power supply cable correctly. Verify battery voltage is no lower than 15 V. Wire and plumb the system as shown in Figure 13.

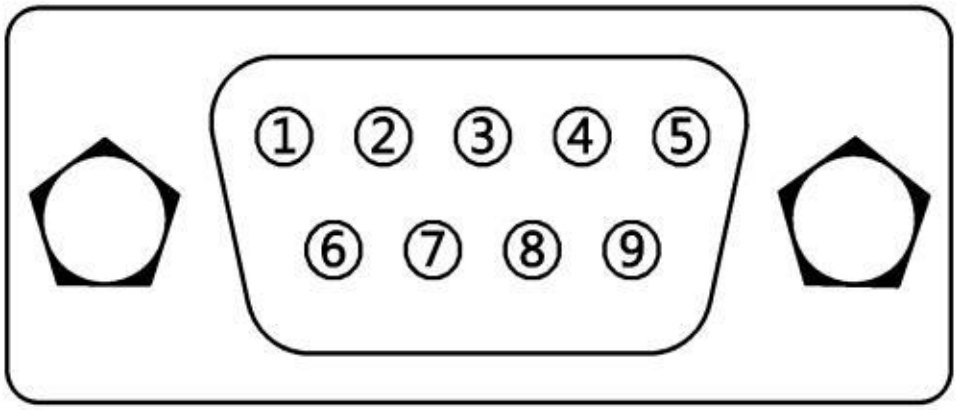

ECU DB9 Control Pin Definition

（1）RS232 Receive

（2）RS232 Transmit

（3）5 V Switching- Power Input

（4）Throttle Signal Ground

（5）Throttle Signal Input

（6）RS232 Signal Ground

（7）Switching- Power Ground

（8）Switch Signal

（9）5 V Throttle Power Input

Figure 12 ECU (DB9) Control Connection Diagram

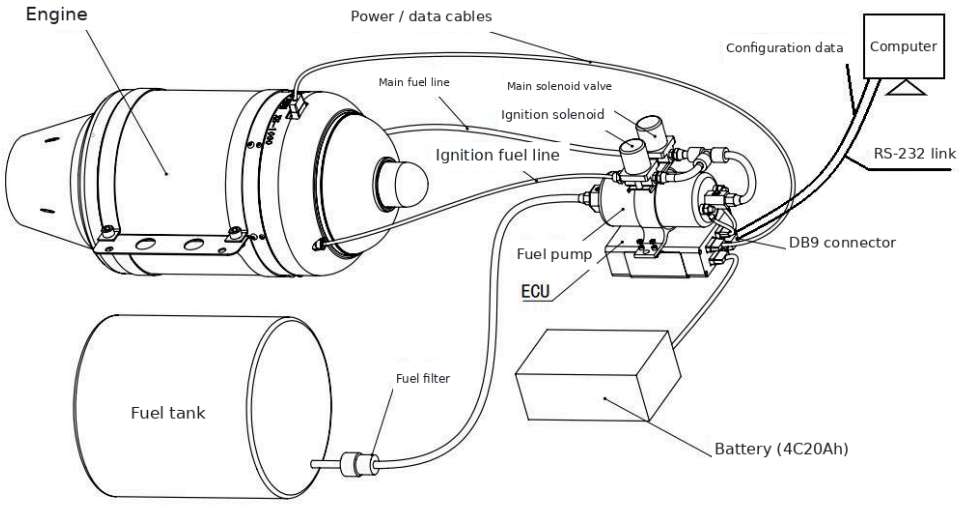

Figure 13 Engine System Connection Diagram

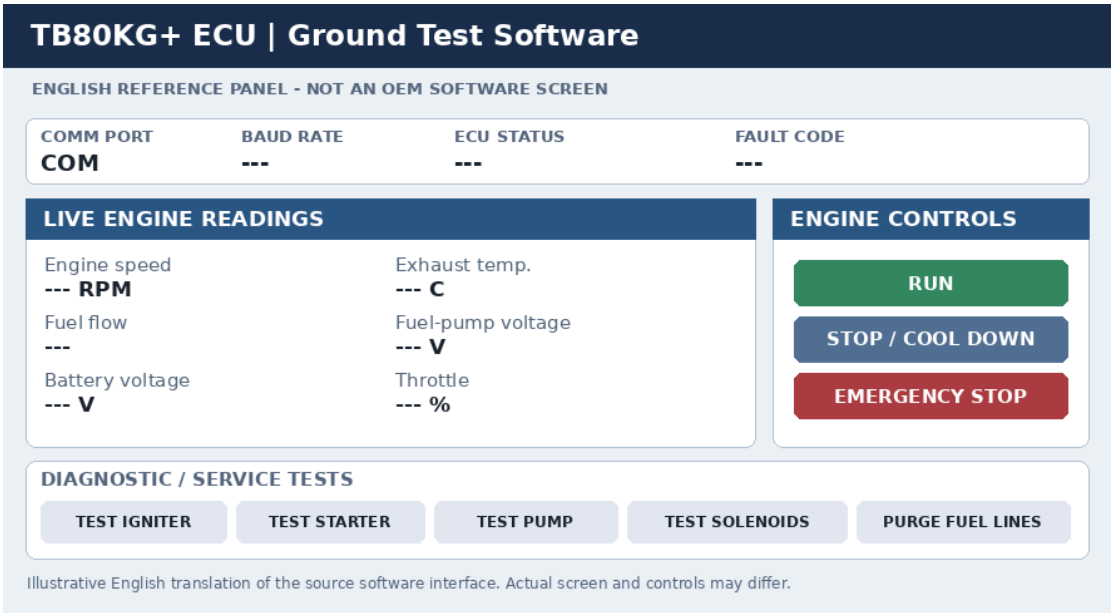

(2) Ground- Test Software

Copy the ground- test software onto the test computer (connection shown in Figure 13). No installation is required; launch the executable directly.

Figure 14 Ground- Test Software GUI

(3) Ground Run Procedure

Launch the test software. Confirm the fault- code field shows No Fault. If fault codes appear, re - flash firmware version 1.00.48 (computer requires internet access).

(4) Pre- run Functional Checks

Fuel- tank installation: Mount fuel tank, ECU and accessories roughly on the same horizontal plane as the engine.

Click Test Igniter. Approximately 25 A instantaneous current reading indicates normal igniter

circuit.

Click Test Starter Motor. Readout shows 500 - 800 r/min confirms proper starter - motor function.

Click Test Fuel Pump. Instantaneous current reading around 1.5 A indicates normal fuel- pump operation.

Click Main Solenoid Valve. A perceptible solenoid click confirms proper main- valve actuation.

Click Ignition Solenoid Valve. A perceptible solenoid click confirms proper ignition - valve actuation.

Fuel priming notes

Purge Pump Air: Activates fuel pump and ignition solenoid to bleed air and fill ignition fuel circuit.

Test Fuel Pump: Activates fuel pump and main- fuel solenoid to bleed air and fill main- fuel / lubrication circuit.

Fuel- priming steps:

Disconnect main- fuel and ignition- fuel tubing; purge all air bubbles from fuel lines.

Re- connect both fuel lines:

① Repeatedly click Test Fuel Pump until displayed pump voltage reaches 3 V- 3.5 V, then stop priming main circuit.

② Click Purge Pump Air ten times to complete ignition- circuit priming.

(5) Engine Run

Click the Run button on the software interface.

The starter motor engages and rotational speed rises. Current reading decreases gradually from ~20 A down to ~7 A. Monitor for sustained over- temperature conditions and abnormal noise. Once engine stabilizes at idle speed, adjust throttle percentage by dragging the throttle slider to set target rotational speed.

Engine shutdown procedure: Reduce engine speed down to idle first, then click Stop / Cool - Down. The engine executes automatic post- run cooling blow- down.

Note: Emergency stop: Click Emergency Stop immediately in case of any anomaly during operation.

Note: Do not restart engine until exhaust- gas temperature drops below 80 ° C.

4.2 Engine Storage

Store engine in dust- free, dry surroundings. Avoid prolonged vertical storage orientation.