FLYSPARK / PRODUCT TECHNICAL DATA

Turbojet Engine

T B -250

Technical Specifications



FlySpark

Technical Parameters

Max Thrust	25KGf (250N)	Remarks
Engine Weight	1800g	
Diameter	118mm	
Length	280mm	
Max Speed	115000rpm/min	
Idle Speed	32000rpm/min	
Fuel Consumption at Max Speed	652g/min	
Compression Ratio	3.9:1	
Max Ground Air Intake flow	0.5kg/s	
Instantaneous Max Exhaust Temp	750℃	
Operating exhaust Temp.	480-750℃	
Ignition start time	＜30s	Ignition to Idle Speed
Acceleration	5～7s	Idle to Max RPM
Deceleration	5s	Max RPM to Idle
Max Ignition Altitude	5000m	
Max Flight Altitude	10000m	
Fuel Tank Inflation Pressure	50-70kpa	Altitude over 3000m
Axial overload	20G	
Operating Ambient Temp.	-40℃~50℃	
Maintenance Cycle	25hour in normal	Service life
Applicable Fuel	Aviation Kerosene (Rp-3)/NO.0 Diesel	
Fuel Additive	2-stroke oil	Suggest to add 3% Mobil 2T
Bearing Lubrication	Fuel Self-lubrication	

Ignition	Fully Automatic Fuel	
Controller Interface	TTL/RS232 or 422	Protocol included with product
Power	12V (3S Lipo)	
ECU Power	6V/2A	
Engine Storage Duration	24 months	Temp. -40°C～60°C, Humidity < 80%

Remarks: All data are measured under an error tolerance of STP±3%;

STP(Standard Temperature and Pressure): 15°C, 1013mbar

System Connection Diagram

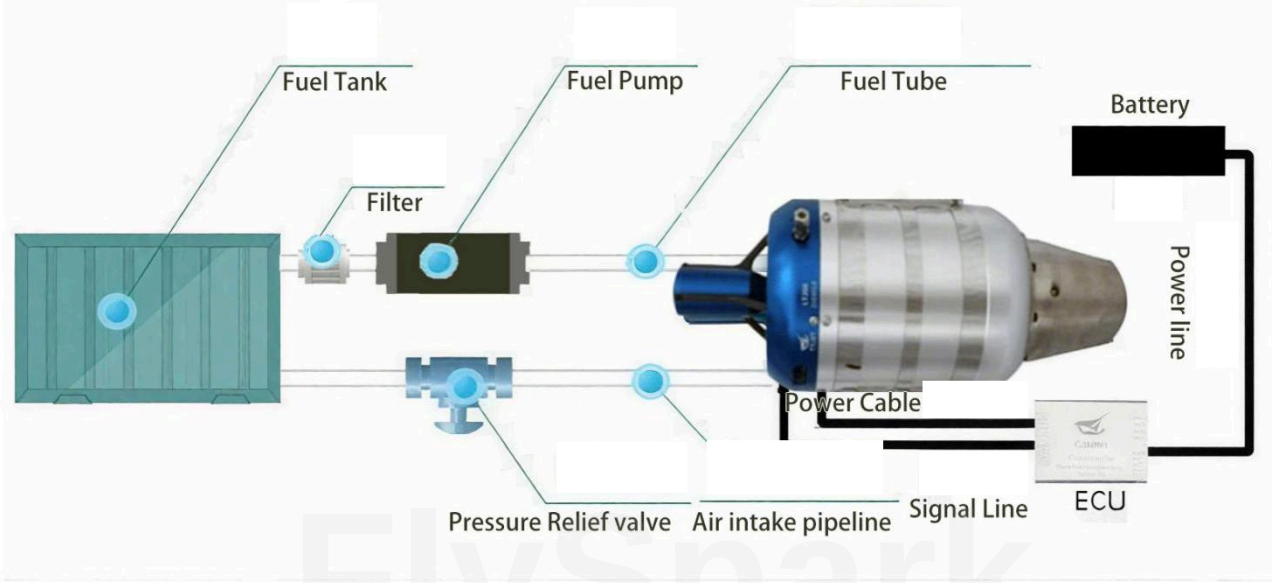

Product Dimension Drawing

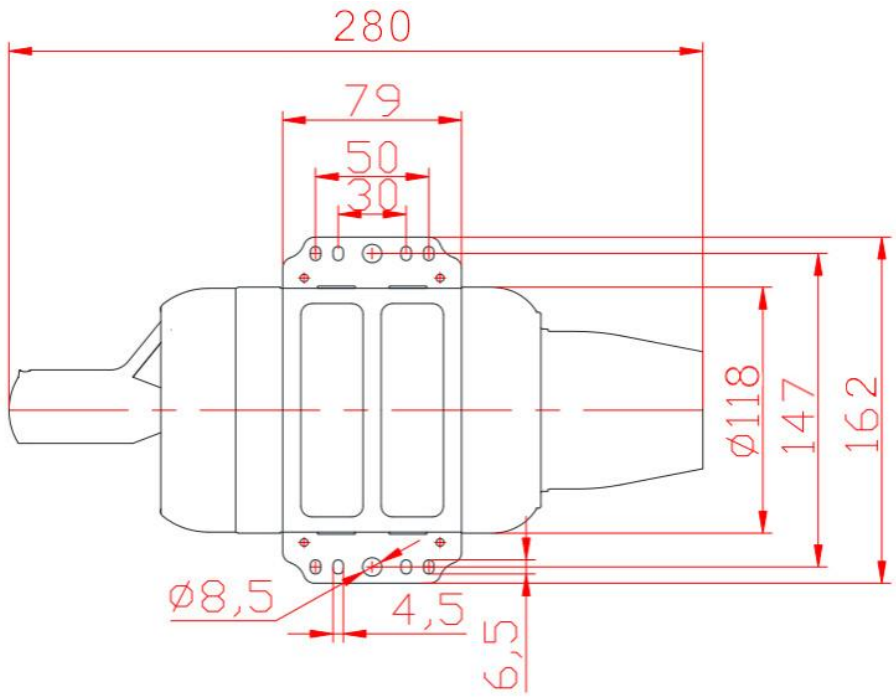

FlySpark

Accessories List

Item	Description&Details	Quantity	unit	Remarks
1	Engine Assembly	1	PC	
2	Product Instruction	1	PC	Electronic Copy
3	ECU	1	PC	Electric Control Unit
4	GSU	1	PC	Ground Support Unit
5	Fuel Pump	1	PC	
6	Fuel Filter	1	PC	
7	Peripheral Line	1	PC	Battery/Fuel Pump→ ECU
8	Signal Line	1	PC	ECU→Engine
9	Power Line	1	PC	ECU→Engine
10	Fuel Tube	1	PC	

FlySpark

FlySpark Sales & Enquiries

AnuShakti Infotech Pvt. Ltd.

Phone / WhatsApp: +91 6375729997

info@flyspark.in

flyspark.in