TB120B Technical Specification



TB120B Engine Packing List (Per Set)

No.	Name	Qty	Remarks
1	Engine 	1	
2	Power Cable 	1	
3	Signal Cable 	1	
4	GSU (Ground Support Unit) 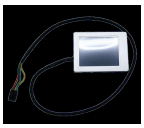	1	Optional

FlySpark

No.	Name	Qty	Remarks
5	Hoop Clamp 	1	

Technical Parameters

Model	TB120B
Max Thrust	130 daN
Idle Speed	35000 rpm
Idle Thrust	30 daN
Fuel Consumption at Max Speed	2.7 kg/min
Start- up Time	≤70 s
Acceleration / Deceleration Time	8 / 10 s
Starting Method	Fuel start
Air Mass Flow	2 kg/s
Pressure Ratio	4.4
Maximum Rotational Speed	59000 rpm
Fuel Type	Jet- A1, Jet- TS1 or high- grade diesel with 2.5- 5% lubricating oil mixing ratio
Fuel Consumption Rate at Max Speed	1.25 kg/(daN • h)
Weight	15 kg
Overall Dimension	Φ244 × 565 mm
Operating Altitude	0- 12000 m
Thrust- to- Weight Ratio	8
Max Exhaust Gas Temperature	1100 K

FlySpark

Overall Dimension of Engine

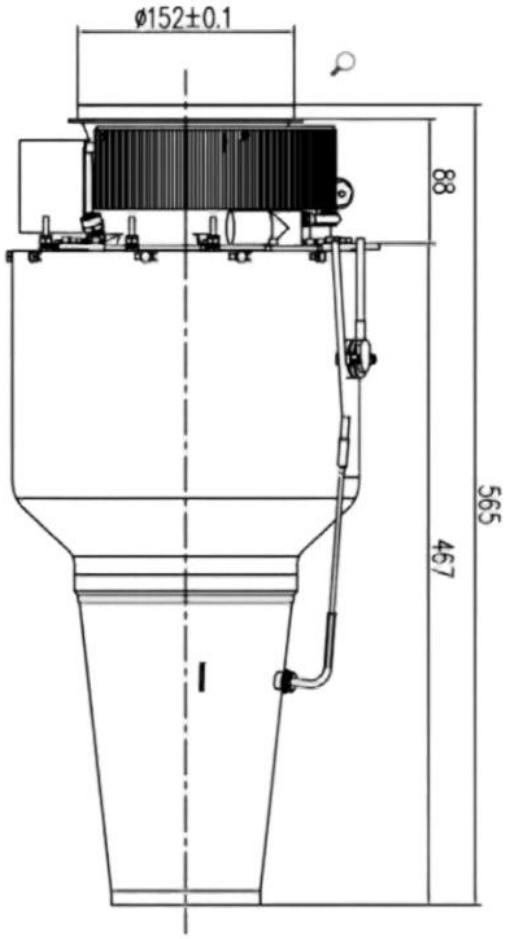

FlySpark