120 Engine

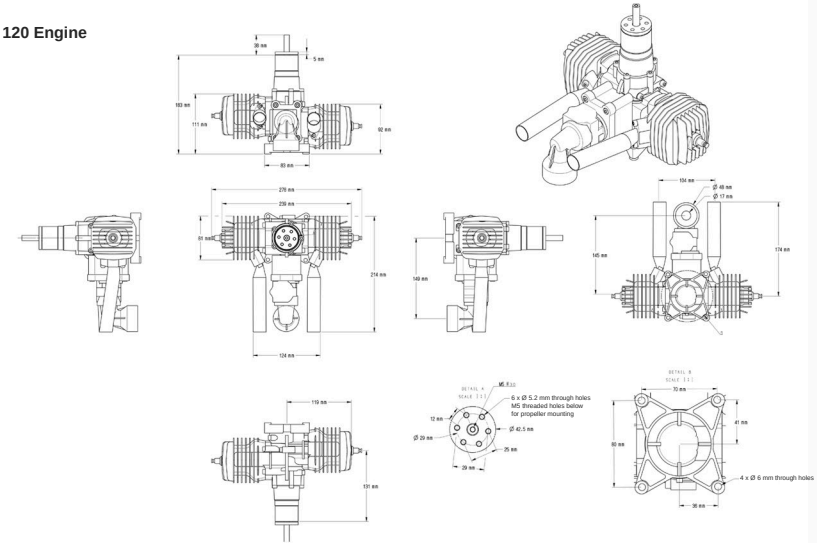

No.	Speed	Torque	Power	Thrust	Fuel Consumption
	rpm	N.m	KW	kg	L/h
1	2000	1.8	0.3	2.6	0.93
2	3000	6.1	1.4	6.7	2.07
3	4000	10.0	3.1	9.8	2.52
4	5000	12.8	4.8	13.5	3.03
5	5500	15.2	6.4	17.5	3.32
6	6000	16.9	7.8	20.5	3.74
7	6500	17.1	8.5	22.6	4.21
8	7000	16.9	9.1	23.6	4.57

