FLYSPARK 120CC ENGINE

TECHNICAL DATASHEET

Model Type: 120CC

Twin-cylinder • Air-cooled • Two-stroke • Automatic CDI ignition
Mixture lubrication • Compatible with push and pull devices



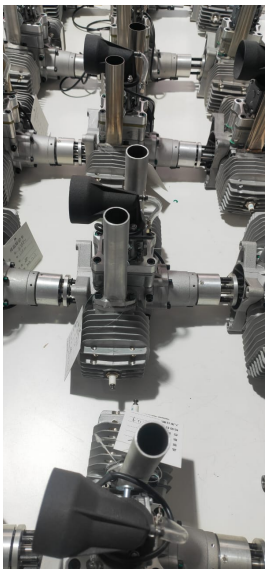

DISPLACEMENT
120 cc

RATED POWER
11.22 hp
8.25 kW

STATIC THRUST @ 100 m
26.5 kg

PRICE (INR)
₹ 1,95,000

Technical Specifications

POWER 11.22 hp / 8.25 kW	**WEIGHT** 3.05 kg
STATIC THRUST @ 100 m 26.5 kg	**STATIC THRUST @ 1800 m** 23.5 kg
MAX. TAKE-OFF WEIGHT 60 kg	**CRANKSHAFT** 3 ball bearings
SPEED RANGE 1300–7500 rpm	**LUBRICATION RATIO** 25:1 to 30:1
RECOMMENDED PROPELLERS 26×10, 26×12, 27×10, 28×10	**IGNITION VOLTAGE** 6.0–8.4 V DC
BORE × STROKE 45 mm × 35 mm	**FUEL CONSUMPTION** 4.5 L/h
DISPLACEMENT 120 cc	**DIMENSIONS (L × W × H)** 285 × 220 × 222 mm

120CC ENGINE | ENGINEERING DRAWING & TEST DATA

Technical views, mounting details and measured performance points

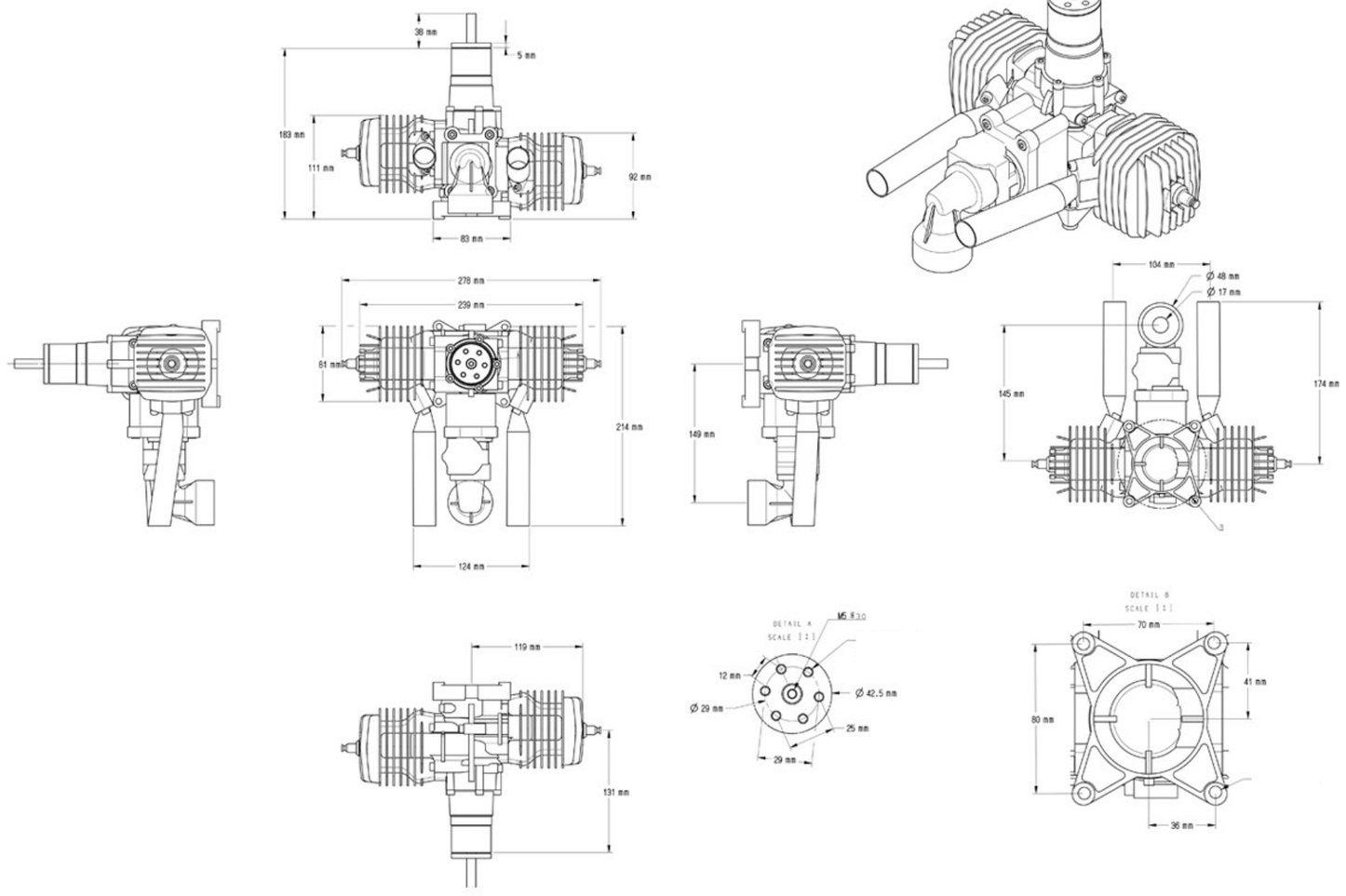

ENGINE MOUNTING AND DIMENSIONAL VIEWS

RPM PERFORMANCE TEST

No.	Speed rpm	Torque N·m	Power kW	Thrust kg	Fuel use L/h
1	2000	1.8	0.3	2.6	0.93
2	3000	6.1	1.4	6.7	2.07
3	4000	10.0	3.1	9.8	2.52
4	5000	12.8	4.8	13.5	3.03
5	5500	15.2	6.4	17.5	3.32
6	6000	16.9	7.8	20.5	3.74
7	6500	17.1	8.5	22.6	4.21
8	7000	16.9	9.1	23.6	4.57

PERFORMANCE CURVES (ORIGINAL)

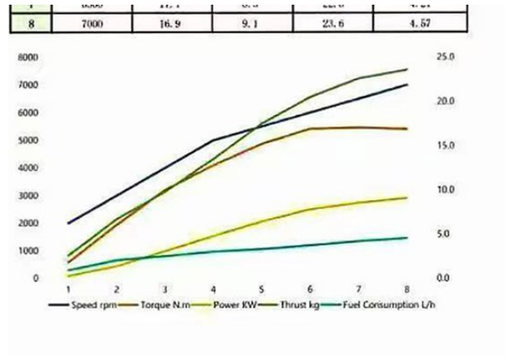

FlySpark Sales & Enquiries

AnuShakti Infotech Pvt. Ltd. | +91 6375729997

info@flyspark.in | flyspark.in